CHAPTER 1.

INTRODUCTION

CHAPTER 1

1. INTRODUCTION

1.1 Energy Metabolism in the Heart

Heart is a high energy demand organ which needs continuous supply of adenosine triphosphate (ATP) to maintain contractile function (1). Since no ATP reserves exist in the heart, contractile function of the heart would fail within 5 beats if myocardial ATP synthesis ceased. The continuous synthesis of ATP in the heart is primarily met by the metabolism of fatty acids and carbohydrates (1,2). However, depending on availability the heart can also use ketones and amino acids as energy sources (3). In the adult heart over 90% of the ATP supply is generated from mitochondrial oxidative phosphorylation, with the remainder originating from glycolysis (1,2). The majority of this mitochondrial ATP production normally originates from fatty acid β-oxidation (1,4). The reminder of ATP production is derived from glycolysis, and the oxidation of glucose, lactate, and ketone bodies (Figure 1-1). However, the heart has the ability to switch between these fuel sources depending on a number of factors, which includes contractile demand, nutritional status, transcriptional/translational and post-translational control of energy metabolic pathways, and the presence of underlying cardiac disease(s) (1, 2,5,6). Interestingly, this energy substrate preference differs between the adult and neonatal heart. During the fetal life levels of fatty acids are very

low and the heart relies mostly on glycolysis and lactate oxidation to meet its energy demands (5,7,8). Shortly after birth, major changes in energy metabolism occur, which is characterized by a shift in substrate preference from glycolysis to a rapid increase in fatty acid β-oxidation (5,9). Because fatty acid β-oxidation is the major source of energy in the heart, a thorough description of fatty acid β-oxidation pathway will be first described.

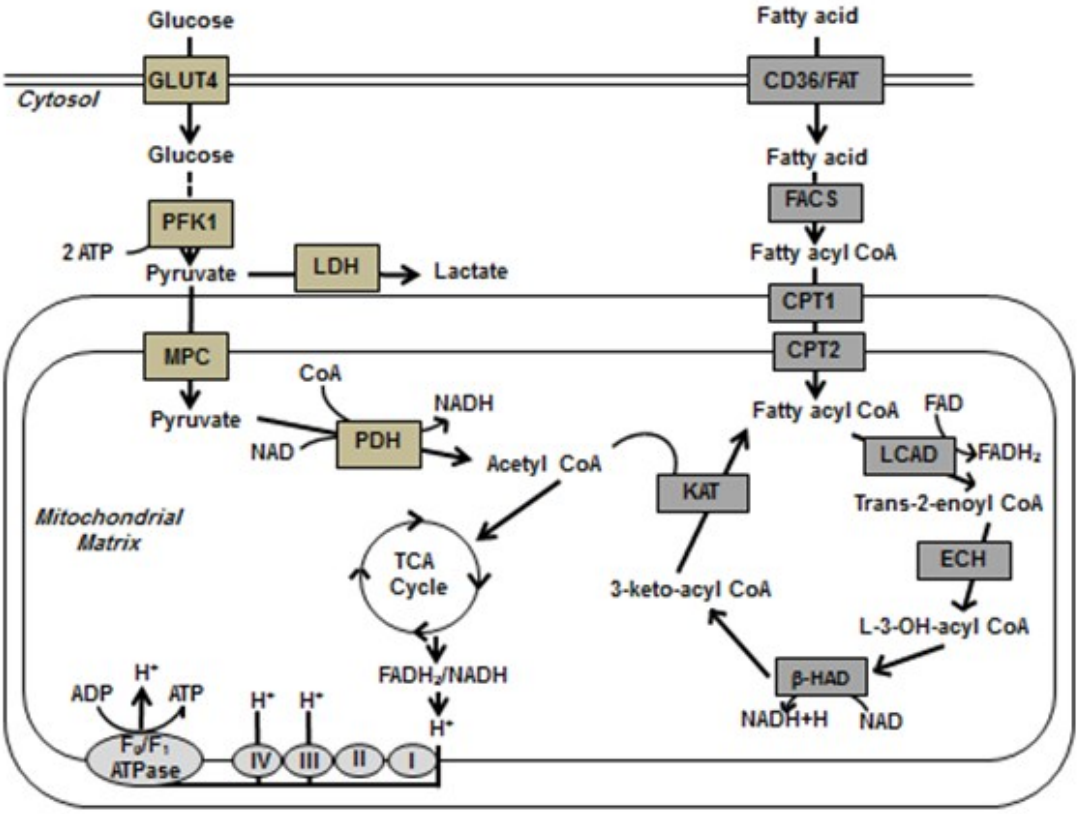

Figure 1-1: Summary of major metabolic pathways in the heart.

Fatty acids and glucose are the two key substrates that provide ATP for the functioning of the heart. Fatty acids are transported into the cytosol by CD36 or fatty acid transport proteins (FAT). Subsequently fatty acids are converted to fatty acyl CoA esters by fatty acyl CoA synthetase (FACS). Carnitine palmitoyl transferase 1 (CPT1) is the key enzyme in mitochondria that catalyzes the conversion of fatty acyl CoA to fatty acyl carnitine that is converted back to fatty acyl CoA by CPT2. The metabolism of fatty acyl CoA in the mitochondria occurs via the β-oxidation

pathway involving the sequential metabolism of acyl CoAs by acyl CoA dehydrogenase (LCAD), enoyl CoA hydratase (ECH), L-3-hydroxyacyl CoA dehydrogenase (β-HAD), and 3-ketoacyl CoA thiolase (3-KAT). Insulin dependent glucose uptake into the cytosol is mediated by GLUT4. Glucose subsequently undergoes glycolysis to generate pyruvate, the rate of which is regulated by phosphofructokinase 1 (PFK1). Pyruvate enters the mitochondria via the mitochondrial pyruvate carrier (MPC) which undergoes oxidation by the enzyme pyruvate dehydrogenase (PDH). Acetyl CoA thus generated from fatty acids and glucose enter the tricarboxylic acid (TCA) cycle to generate reducing equivalents (NADH and $FADH_2$) which then enters the electron transport chain. The electron transport chain and oxidative phosphorylation are coupled by a proton gradient across the inner mitochondrial membrane. The efflux of protons from the mitochondrial matrix creates an electrochemical gradient (proton gradient). This gradient is used by the F_0/F_1 ATP synthase complex to make ATP via oxidative phosphorylation.

1.2 Myocardial Fatty Acid Metabolism

1.2.1 Mitochondrial Fatty Acid Uptake

Circulating free fatty acids (FFAs) either bound to albumin or released by the cell surface enzyme lipoprotein lipase (LPL) from triacylglycerol (TAG) contained in very density lipoproteins (VLDL) or chylomicrons enter the cardiomyocyte either by a carrier mediated pathway or facilitated diffusion (10-12). TAG catabolism is catalyzed by a series of lipolytic reactions that are initiated by the primary endogenous tissue lipase, adipose triglyceride lipase (ATGL) which converts TAG to diacylglycerol (DAG) (290). ATGL is suggested as a crucial enzyme for myocardial TAG lipolysis and cardiac function (291). In agreement, global ATGL deletion in mice resulted in a pronounced increase in

intramyocardial TAG pool, which eventually led to a decline in heart function and premature death (292). Similarly, patients with ATGL gene mutations showed systemic TAG accumulation, and developed sever cardiomyopathy (293). Hormone-sensitive lipase (HSL) and monoglyceride lipase (MGL) complete the lipolytic reactions by hydrolyzing DAG and monoacylglycerol (MAG), respectively (290). Various membrane proteins that facilitate cellular fatty acid uptake have been identified. These include the membrane associated fatty acid transporters CD36/FAT, the plasma membrane fatty acid binding protein (FABPpm), and fatty acid transport proteins (FATPs), with various molecular weights and different degrees of post-translational modifications (13-15). Once in the cytoplasm, FFAs are converted into fatty acyl CoA esters by fatty acyl CoA synthetase 1 (1). The fatty acid moiety from fatty acyl CoA is then transferred to carnitine and is taken up into the mitochondria by the carnitine shuttle. Carnitine palmitoyltransferase-1 (CPT-1) is the rate-limiting enzyme of mitochondrial fatty acid uptake (16,17). Malonyl-CoA, a potent allosteric inhibitor of CPT-1 is synthesized by the enzyme acetyl-CoA carboxylase (ACC) (18-20). Two isoforms of ACC have been identified, ACC1 and ACC2, with the later being predominant in the heart (18,21,22). Degradation of malonyl-CoA is mediated by malonyl-CoA decarboxylase (MCD) (20,23,24). Once in the matrix, acylcarnitine is converted back to fatty acyl CoA by the inner

mitochondrial membrane enzyme CPT2 (17,25,26). Once inside the mitochondria, fatty acids undergo β-oxidation.

1.2.2 Fatty Acid β-Oxidation

Fatty acid β-oxidation is the process of breaking down a long chain acyl-CoA molecule to acetyl-CoA in the mitochondrial matrix. The number of molecules of acetyl-CoA produced depends on the carbon length of the fatty acid being oxidized. This process involves a variety of enzymes, with the four main enzymes involved in fatty acid β-oxidation being, in order, acyl-CoA dehydrogenase, enoyl-CoA hydratase, hydroxyacyl-CoA dehydrogenase, and ketoacyl-CoA thiolase (1,27). At the end of each β-oxidation cycle, two new molecules are formed, an acetyl-CoA and an acyl-CoA that is two carbons shorter. Additionally, during β-oxidation flavin adenine dinucleotide ($FADH_2$) and nicotinamide adenine dinucleotide (NADH) are formed. One $FADH_2$ is produced during the reaction catalyzed by acyl-CoA dehydrogenase. An NADH is produced during the reaction catalyzed by hydroxyacyl-CoA dehydrogenase. The $FADH_2$ and NADH produced during the process of fatty acid β-oxidation are used by the electron transport chain to produce ATP. There are different isoforms of these enzymes of β-oxidation, which have different affinities depending on the length of fatty acid chain. For example, there is a very long chain acyl-CoA dehydrogenase, a long chain acyl-CoA dehydrogenase, a medium chain acyl-CoA dehydrogenase, and a short chain acyl-CoA

dehydrogenase. Interestingly, the enoyl-CoA hydratase, hydroxyacyl-CoA dehydrogenase, and ketoacyl-CoA isoforms specific for long chain fatty acids form an enzyme complex on the inner mitochondrial membrane (1, 27).

1.2.3 Regulation of Fatty Acid β-Oxidation

The activity of the enzymes of fatty acid β-oxidation is affected by the level of the products of their reactions (28). Each of the β-oxidation enzymes are inhibited by the specific fatty acyl-CoA intermediate it produces. Interestingly, 3-ketoacyl-CoA can also inhibit enoyl-CoA hydratase and acyl-CoA dehydrogenase (29). β-oxidation can also be allosterically regulated by the ratio of $NADH/NAD^+$ and acetyl-CoA/CoA level. A rise in the $NADH/NAD^+$ or acetyl-CoA/CoA ratios results in inhibition of fatty acid β-oxidation (294). Increases in the acetyl-CoA/CoA ratio have specifically been shown to lead to feedback inhibition of ketoacyl-CoA thiolase (1,30).

The enzymes involved in fatty acid β-oxidation are under a precise control by transcription factors. There are a number of transcription factors that regulate the expression of these proteins. The peroxisome proliferator-activated receptors (PPARs) and a transcription factor coactivator peroxisome proliferator-activated receptor gamma coactivator 1-alpha (PGC-1α) are the most well-known transcriptional regulators of fatty acid β-oxidation (31). Examples of proteins involved in fatty acid β-

oxidation that are transcriptionally regulated by the PPARs include FATP, acyl-CoA synthetase 1 (ACS1), CD36/FAT, MCD, CPT1, long chain acyl-CoA dehydrogenase (LCAD), and medium chain acyl-CoA dehydrogenase (MCAD) (31-33). Ligands that bind to and modulate the activity of PPARα, δ, and γ include fatty acids. The genes regulated by each of the PPARs vary between tissue types. For example, skeletal muscles PPARδ, but not PPARα, upregulates the protein expression of CPT1 (34). PPAR isoforms are also differentially expressed between tissue types. While PPARδ protein tends to be ubiquitously expressed, PPARα is predominantly expressed in highly metabolic tissues (i.e. heart, skeletal muscle, and liver) and PPARγ is predominantly expressed in tissues such as adipose tissue (35-37). Until recently, PPARγ was not believed to play a significant role in regulating fatty acid β-oxidation. However, recent knockout and over-expression studies have suggested that PPARγ may have a role in regulating fatty acid β-oxidation rates. Overexpressing PPARγ in cardiac muscle results in increased mRNA levels for fatty acid β-oxidation proteins (38,39).

The transcriptional co-activator PGC-1α binds to and increases the activity of PPARs to regulate fatty acid β-oxidation (40,41). PGC-1α upregulates expression of enzymes involved in fatty acid uptake and oxidation (31,32,41). PGC-1α is regulated at both the gene and protein level. AMP-activated protein kinase (AMPK) activates PGC-1α by phosphorylating PGC-1α on threonine and serine residues (42). It was

suggested that AMPK increases PGC-1α mRNA levels by regulating the binding of transcription factors to specific sequences located in the PGC-1α gene promoter (1,31,42). Recently, regulation of fatty acid β-oxidation enzymes by lysine acetylation emerged as a key post-translational control, and will be discussed in detail later in this thesis.

1.3 Myocardial Glucose Metabolism

1.3.1 Glucose Uptake and Glycolysis

Glucose used by the heart originates either from endogenous glycogen stores, or is transported from the blood into cardiac myocytes via glucose transporters (GLUT), specifically isoforms 1 and 4. GLUT1 is constitutively active being responsible for maintaining basal glucose uptake, whereas GLUT4 is translocated to the sarcolemmal membrane in response to insulin, and increased work load (15,43-46). Once inside the cardiomyocyte, glucose is phosphorylated by hexokinase (HK) into glucose-6-phosphate which undergoes a series of enzymatic reactions, until sequentially converted into two pyruvate molecules in a process known as aerobic glycolysis (47,48). Phosphofructokinase 1 (PFK1) is the rate limiting enzyme of glycolysis which catalyzes the conversion of fructose-6 phosphate to fructose 1,6-bisphosphate (44). PFK1 is activated by adenosine diphosphate (ADP), adenosine monophosphate (AMP) and inhibited by ATP and citrate (2,49). PFK1 can also be stimulated

allosterically by fructose-2,6-bisphosphate generated by the enzyme PFK2 (50-52). fructose 1,6-bisphosphate is spliced by aldolase to two trios sugars, glyceraldehyde 3-phosphate and dihydroxyacetone phosphate, with later rapidly interconverted into glyceraldehyde 3-phosphate by the enzyme triosephosphate isomerase. The trios sugars are then dehydrogenated by the enzyme glyceraldehyde 3-phosphate dehydrogenase forming 1,3-bisphosphoglycerate. Phosphate group is then transferred from 1,3-bisphosphoglycerate to ADP by phosphoglycerate kinase, producing ATP and 3-bisphosphoglycerate. Phosphoglycerate mutase converted 3-bisphosphoglycerate to 2-bisphosphoglycerate, which further converted to phosphoenolpyruvate by enolase. Final step of glycolysis is catalyzed by pyruvate kinase which phosphorylate phosphoenolpyruvate producing ATP and pyruvate (47,48). At the transcriptional level, hypoxia inducible factor-1α (HIF-1α) is a master transcriptional up-regulator of enzymes involved in glycolysis (53). HIF-1α may be of particular importance in the fetal heart, which resides in a low oxygen environment, as well as the immediate newborn heart, which is highly dependent on glycolysis for ATP generation. HIF-1α protein levels are high in fetal hearts, but rapidly decrease following birth and during maturation (54,55). In the absence of oxygen, pyruvate derived from glycolysis can be converted to lactate by the enzyme lactate dehydrogense (LDH) (12,56). In times of cardiac stress, lactate and

protons produced by anaerobic glycolysis can accumulate and compromise cardiac work and efficiency (57-59).

1.3.2 Glucose Oxidation

The oxidation of pyruvate, derived either from glycolysis (glucose oxidation) or from lactate (lactate oxidation), accounts for the majority of carbohydrate-derived ATP (1,60,61). Pyruvate is transported into mitochondria via the mitochondrial pyruvate carrier (MPC) (62-64). Under normal aerobic conditions, pyruvate is oxidized to acetyl CoA by pyruvate dehydrogenase (PDH) complex, the rate-limiting enzyme of glucose oxidation, which consists of PDH, PDH kinase (PDK), and PDH phosphatase (PDHP) enzymes (65,66). PDH is regulated both by substrate/product ratios and by covalent modifications. PDH activity is decreased by increased ratios of mitochondrial NADH/NAD+ and acetyl-CoA/CoA (67-70). Covalent modifications that regulate PDH activity include phosphorylation and acetylation (as recently suggested), which will be discussed in detail later in this thesis. Dephosphorylation of PDH is positively related to PDH activity, whereas phosphorylation of PDH decreases its activity, thereby restricting the oxidation of pyruvate. The heart expresses three PDK isoforms with the PDK4 isoform widely expressed in heart and skeletal muscles (66,68,70). Increased PDK protein expression, which results in increased PDH phosphorylation, is a

key mechanism involved in reduced PDH flux and glucose oxidation (66,67,71).

1.3.3 Cardiac Insulin Signaling

Insulin is a major hormone central to carbohydrate and lipid metabolism. In the fed state, high blood glucose levels stimulate pancreatic β-cells to secrete insulin. Once in blood, insulin circulates and binds to its receptor on target tissues. Insulin binding to the α-subunit of insulin receptor (IR) results in autophosphorylation and activation of IR kinase activity. The activated IR phosphorylates and activates its downstream substrate, the insulin receptor substrate (IRS) (72). Tyrosine phosphorylated IRS interacts with various protein substrates. Among them, a key substrate for glucose uptake and metabolism is the phosphatidylinositol-3-kinase (PI3K). The activated PI3K increases the production of phosphatidylinositol trisphosphate (PIP3) which binds the pleckstrin homology (PH) domains of phosphoinositide-dependent kinase 1 (PDK1) and protein kinase B (Akt) (73). Once the PH domain of Akt binds to PIP3, PDK1 phosphorylate Akt on T308 leading to a robust increase in its activity (74). Activated Akt increases the translocation of GLUT4 vesicle to the cellular membrane leading to increases in glucose uptake (75,76). In addition, activated Akt induces glycogen synthesis through phosphorylation and inactivation of glycogen synthase kinase 3α/β (GSK3α/β), which decreases glycogen synthase phosphorylation

levels and increases its enzymatic activity (77). The net insulin effects on glucose metabolism are increased cellular glucose uptake and glycogen synthesis.

1.4 Neonatal Heart Energy Metabolism

Heart is a highly energy demand organ which depends mainly on oxidation of fatty acids to produce adenosine triphosphate (ATP) required for maintenance of it is function (1). The reminder of ATP production is derived from glycolysis and oxidation of glucose, lactate, and ketone bodies (2,4). Interestingly, this energy substrate preference differs between the adult and neonatal heart (5). During the fetal life levels of fatty acids are very low (less than 0.1 mM in the fetal circulation) and the heart relies mostly on glycolysis and lactate oxidation to meet its energy demands (6). Shortly after birth, major changes in energy metabolism occur, which characterized by a shift in substrate preference from glycolysis to a rapid increase in fatty acid β-oxidation (Figure 1-2) (5,7). The increase in fatty acid β-oxidation is related to the rapid drop of malonyl CoA level days post birth (9). Malonyl CoA is a strong inhibitor of CPT-1, a mitochondrial fatty acid uptake enzyme (1). Both a decreased synthesis by ACC (21) and increased degradation by MCD (25) are responsible for this drop in malonyl CoA level. Moreover, PGC-1α is important transcriptional regulator of genes involved in fatty acid metabolism, with activation is lead

to increase in expression of genes involved in fatty acid uptake, storage, and oxidation (1,2). The expression of PGC-1α is increased with maturation which can lead to increase in fatty acid β-oxidation (78).

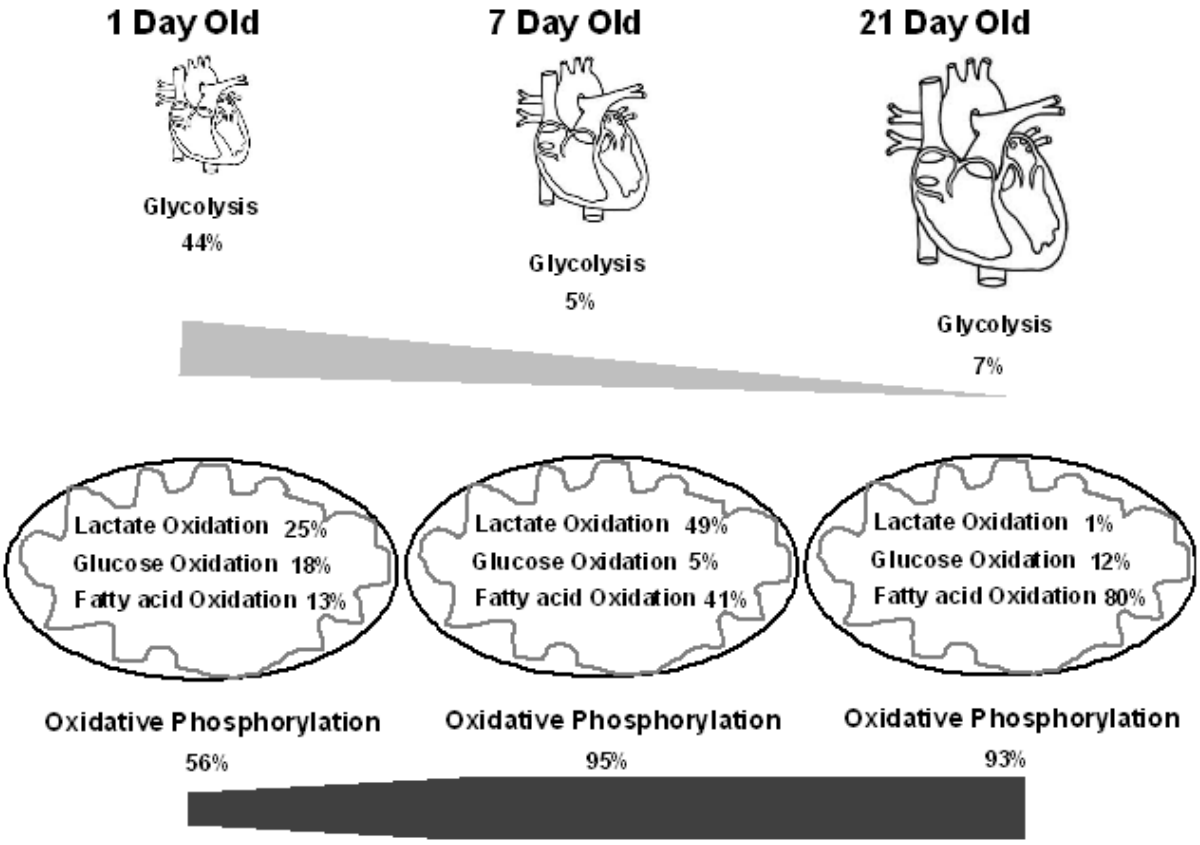

Figure 1-2: Overview of myocardial energy metabolism during maturation.

Percent contributions of glycolysis and oxidative metabolism including lactate, glucose, and fatty acid oxidation to cardiac ATP production during maturation in the isolated working rabbit heart preparation. The 1-day heart relies predominantly on glycolysis and lactate oxidation for ATP production, with minor contributions from the oxidation of glucose and fatty acids. 7 days post-birth, glycolytic rates significantly decline and account for only 5% of myocardial ATP production. By 21 days, cardiac fatty acid β-oxidation predominates and accounts to about 80% of the ATP produced. In summary, during maturation the heart switches from glycolysis to oxidative energy metabolism primarily fatty acid β-oxidation.

One of PGC-1α targets is estrogen receptor related alpha (ERRα), which can increase the expression of PDK4, a negative regulator of the glucose oxidation rate limiting enzyme PDH complex, limiting the oxidation of glucose in neonatal period (79). HIF-1α is a transcription factor regulates the expression of genes involved in anaerobic glycolysis. Hexokinase is under the control of HIF-1α, with activation of HIF1-α upregulate its expression (80). HIF-1α level of expression is significantly decreases post birth (54), which leads to a significant drop in glycolysis during cardiac maturation. In addition, HIF-1α can also influence fatty acid metabolism. In vivo, hypoxic conditions are accompanied by a down-regulation of genes involved in fatty acid β-oxidation, in particular PPARα, MCD, and CPT1(81). Interestingly, HIF-1α itself may be involved in this process as it inhibits the DNA-binding activity of PPARα (82).

1.5 Energy Metabolism in the Diseased Heart

Obesity and diabetes are major health concerns that have reached epidemic proportions in Canada and the world (83). The presence of obesity and diabetes is usually accompanied by cardiovascular complications. Among the many complications is the high risk of ischemic heart diseases and heart failure (HF) (84,85). Although classical pharmacological and non-pharmacological treatment strategies can improve cardiac function and prolong survival in patients with heart

diseases, these attempts are ultimately inadequate to prevent disease progression (86,87). Given the large number of patients suffering from obesity and diabetes, it is important to find novel therapeutic strategies to treat cardiovascular diseases associated obesity and diabetes. Nonetheless, to maximize this potential therapeutic approach for treating obesity-related cardiovascular diseases, it is important to have a better understanding of how energy metabolism is controlled in the heart, which is the primary focus of this thesis.

1.5.1 Cardiac Energy Metabolism in Obesity

Fatty acids are a major energy source for the heart that is used to sustain contractile function. To meet the high energy demands of cardiac muscle, fatty acid uptake and subsequent mitochondrial fatty acid β-oxidation must be coordinately regulated in order to ensure adequate, but not excessive supply, for cardiac energetic requirements. The presence of obesity or insulin-resistance can result in dramatic alterations in cardiac energy metabolism. One such alteration is a switch from using carbohydrates to fatty acids as a source of energy (17,23,61,88,89). The increase in fatty acid β-oxidation is occurring primarily at the expense of glucose oxidation. This inverse relationship between glucose and fatty acid oxidation was first described by Philip Randle in 1960s (90). In humans, positron emission tomography and ^{11}C-palmitate imaging confirm the increase in cardiac fatty acid β-oxidation in the obese and diabetic

patients (91,92). Studies from our laboratory and others have shown that fatty acid β-oxidation rates in the heart are increased in rats and mice subjected to diet-induced obesity (DIO), in db/db mice, and in ob/ob mice, with the increase in fatty acid β-oxidation occurring primarily at the expense of glucose oxidation (21,28,57,88,93,94). Increases in fatty acid β-oxidation that exceed the ability of the mitochondria to metabolize its downstream products can lead to the failure of the muscles to completely oxidize fatty acids, leading to the accumulation of acid soluble metabolites as a markers of incomplete β-oxidation. Indeed, increased fatty acid β-oxidation in the skeletal muscle and heart during high fat feeding contributes to the mismatch between β-oxidation and tricarboxylic acid (TCA) cycle activity, leading to incomplete fatty acid β-oxidation (58,60, 95-97). Increased activity of fatty acid β-oxidative enzymes and their upstream transcriptional regulators such as PPARα contribute to the increased fatty acid β-oxidation seen in obesity and insulin resistance (35-37,58,63,93,98). Furthermore, obesity-induced changes in the acetylation levels of enzymes involved in fatty acid metabolism is proofed to be important regulator of fatty acid β-oxidation and will be discussed extensively later in this thesis.

1.5.2 Cardiac Hypertrophy

Cardiac hypertrophy is an adaptive response characterized by increased heart mass and volume to increase cardiac workload. Cardiac

hypertrophy is associated with numerous protein expression changes which are conducive to metabolic remodeling from adult to a fetal metabolic profile whereby the heart switches from oxidative metabolism to glycolysis (1,2). The mammalian target of rapamycin (mTOR) is an atypical serine/threonine kinase that plays a key role in the regulation of cell homeostasis and stress response (99). mTOR forms a distinct multiprotein complex known as mTORC1 that is a master regulator of protein synthesis, cell growth, and metabolism. mTORC1 activity can be regulated by growth factors and in response to stress. Akt and AMPK are well known regulators of mTORC1 that are in turn activated by growth factors and stress respectively. Growth factors such as insulin, insulin-like growth factor -1 (IGF-1), epidermal growth factor activate Akt and in turn phosphorylates and activates mTOR (100-103). On the otherhand, activation of AMPK in response to energy deprivation, activates tuberous sclerosis protein complex that in turn inhibits Rheb (Ras homolog enriched in brain), an activator of mTORC1 (104). mTORC1 activity is also increased in response to β-adrenergic signaling (105), angiotensin – II (232) and growth factors such as IGF-1 (106) and results in cardiac hypertrophy. The total deletion of mTOR was not accompanied by compensatory hypertrophy in mice subjected to pressure overload (107). However, it impaired the ability of the heart to adapt to pressure overload stress leading to ventricular dilatation and rapid cardiac dysfunction. On the other hand, partial deletion or inhibition of mTORC1 prevents

pathological cardiac hypertrophy in response to pressure overload while the heart develops compensatory increase in work to overcome the increase in afterload (108). It is interesting to note that, while mTORC1 activation is necessary for the development of cardiac hypertrophy, it is not sufficient to produce cardiac hypertrophy suggesting that it may be exerting its effects through multiple signaling pathways.

The Forkhead families of transcription factors are characterized by the presence of a conserved DNA binding domain known as the Forkhead box (Fox) (109). Three members of the FoxO subfamily – FoxO1, FoxO3, FoxO4 play important roles in maintaining cardiac function. The transcriptional activity of FoxO is inhibited by PI3K-Akt signaling (110). The phosphorylation of Akt by PI3K causes Akt to translocate to the nucleus where it subsequently phosphorylates FoxO (111). This results in transport of FoxO from the nucleus to the cytoplasm resulting in its inhibition. In addition to Akt, serum and glucocorticoid induced kinase 1 (SGK1) can also phosphorylate and inhibit FoxO3 activity (112). On the otherhand, phosphorylation of FoxO3 by AMPK results in its activation (113).

FoxO exerts its anti-hypertrophic activity through its target gene products, the muscle specific ubiquitin ligases atrogin-1 (MAFbx) and MuRF1 (114). Atrogin-1 targets calcineurin for degradation decreases NFAT-dependent transcription and prevents calcineurin-dependent cardiac hypertrophy (115). Atrogin-1 overexpression has been shown to

decrease Akt-mediated FoxO1/3 phosphorylation resulting in activation of FoxO (116). However, the IGF-Akt signaling cascade promotes cardiac hypertrophy by inhibiting FoxO activity (117). In addition to its role in cardiac hypertrophy, FoxOs also play a role in cardiac energy metabolism. FoxO binding sites are found in several metabolic genes such as the acetyl Co A carboxylase 2 (ACC2), fatty acid transporter (CD36), and Glut 4 (118). FoxO proteins also exert metabolic effects through the transcription of PGC-1α that activate genes involved in mitochondrial biogenesis, and fatty acid β-oxidation (119). Activation of FoxO can activate the transcription of PDK4 resulting in suppression of glucose oxidation (120).

1.5.3 Cardiac Energy Metabolism in Heart Failure

Heart failure (HF) is a condition characterized by the inability of the ventricles to fill with or eject blood to meet body requirements (121). The metabolic phenotype of the failing heart appears to be, at least partially, dependent on the stage/severity of the syndrome. Mitochondrial oxidative metabolism and ATP generation are depressed in HF (122-124). There is not a clear consensus as to what changes in fatty acid and carbohydrate oxidation occur in HF. Fatty acid oxidation rates have been shown to be increased (125), decreased (126), or unchanged (127) in patients with HF. Studies involving HF secondary to pressure overload also show variable results. Overall oxidative metabolism was decreased characterized by

decreases in both fatty acid and glucose oxidation in rats with pressure-overload HF (128,129). This contrasts with findings in the canine model of severe HF induced by rapid ventricular pacing, where decreased rates of fatty β-oxidation and increased rates of glucose oxidation are observed (130-132). Furthermore, hypertrophic hearts from spontaneously hypertensive rats have decreased mitochondrial oxidation and increased glucose uptake (suggesting increased glycolysis) (133,134). A study in which fatty acid β-oxidation was decreased by heterologous deletion of CPT-1β in mice was also associated with a worsening of cardiac hypertrophy and function following a transverse aortic constriction (TAC) (135). A recent study by Rong Tian's group also showed that cardiac deletion of ACC2 (which decreases malonyl CoA and increases fatty acid β-oxidation) could also improve cardiac energetics and function in TAC mice (136). Both glucose oxidation and fatty acid β-oxidation decreased very early during the development of cardiac hypertrophy in mice subjected to an abdominal aortic constriction (AAC), leaving the heart in an energy deficient state (137). Recent studies from our group have shown a selective decrease in glucose oxidation in TAC (138) and angiotensin – II induced HF mouse models (58,59,97). Collectively, these findings support the concept that targeting the balance between fatty acid β-oxidation and glucose oxidation is a promising therapeutic strategy to improve cardiac efficiency in HF.

1.6 Acetylation Control of Cardiac Energy Metabolism

Coenzyme A (CoA) and CoA derivatives have a critical role in regulating cardiac energy metabolism (276). This includes a key role as a substrate and product in the energy metabolic pathways, as well as serving as an allosteric regulator of cardiac energy metabolism. The product of both fatty acid and glucose oxidation is acetyl CoA, which then feeds into the TCA cycle (1). CoA and CoA derivatives do not readily cross cellular membranes, and a mechanism is required for shuttling acetyl groups out of the mitochondria. One potential pathway may involve the conversion of mitochondrial acetyl CoA to citrate, which would then be shuttled out of the mitochondria via tricarboxylic anion transporters, which is then converted back to acetyl CoA by a cytoplasmic ATP-citrate lyase (295). While this pathway is the major mechanism by which acetyl groups are shuttled out of the mitochondria in liver, both the tricarboxylic anion transporter and ATP-citrate lyase are expressed at much lower levels in heart versus liver. However, this does not necessarily rule out this pathway as a key mechanism by which acetyl groups are shuttled out of heart mitochondria. A second potential pathway by which acetyl groups may be shuttled out of the mitochondria is via carnitine acetyltransferase (CrAT). CrAT is highly expressed in the heart (296,297), and catalyzes the transfer of acetyl groups from acetyl CoA to acetylcarnitine (296,297). This acetylcarnitine can then be readily transported out of the mitochondria via

a carnitine translocase, where a cytoplasmic CrAT transfers the acetyl groups back to acetyl CoA, which can be used as a substrate for lysine acetylation.

Lysine acetylation is an important dynamic/reversible post-translational modification that occurs on proteins involved in many cellular processes, including nuclear transcription, cell survival, apoptosis, and mitochondrial function (6,139-142). Interestingly, almost every enzyme in glycolysis, glucose, and fatty acid oxidation are acetylated at least on one lysine residue (Figure 1-3). This post translational modification is mediated by histone acetyltransferases which catalyze the transfer of the acetyl moiety from acetyl coenzyme A to the ε-amino group of lysine residue, resulting in neutralization of lysine positive charge and eventually alteration of protein structure and interactions (139,141,143). This reaction is reversed by histone deacetylases, which remove the acetyl moiety from lysine residue, producing deacetylated protein, O-Acetyl Adenosine Diphosphate ribose, and nicotinamide (144,145). Sirtuins (SIRTs) are nicotinamide adenine dinucleotide (NAD^+)-dependent class III histone deacetylases which have been shown to regulate key processes in metabolism (6,142,146-148). SIRT1, SIRT6, and SIRT7 are localized in the nucleus (149-153), SIRT2 is localized in the cytoplasm (154,155), while SIRT3, SIRT4, and SIRT5 are localized in the mitochondria (6,140, 142,146,151,152). This thesis will focus on the role of deacetylases in controlling cardiac energy metabolism.

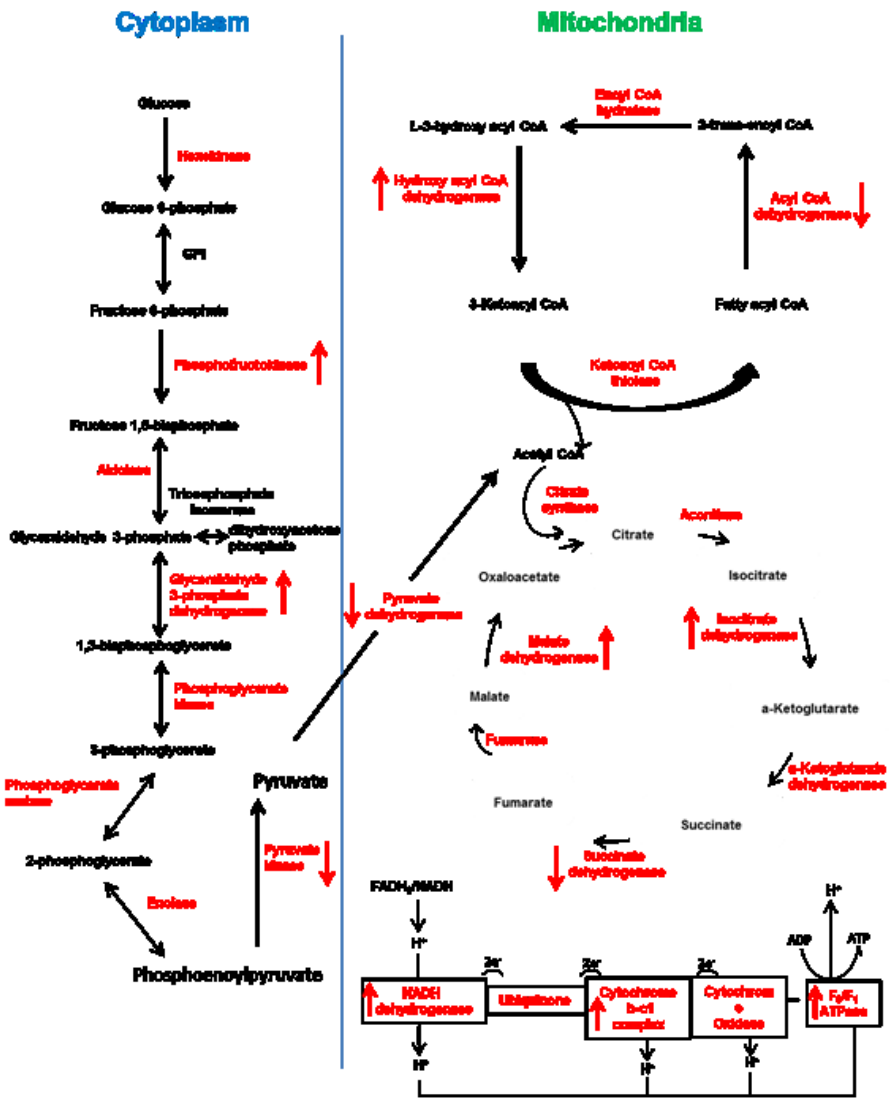

Figure 1-3: Acetylation control of key enzymes involved in cardiac energy metabolism.

Lysine acetylation is a novel post-translational modification that controls the activity of enzymes involved in glucose and fatty acid metabolism. Almost every enzyme in glycolysis, glucose oxidation, fatty acid β-oxidation, TCA cycle, and electron transport chain is acetylated at least on one lysine residue. Metabolic enzymes in red color are known to be acetylated. Red arrows facing up or down indicate stimulatory or inhibitory effects of acetylation on enzyme activity, respectively.

1.6.1 Acetylation Regulation of Cytoplasmic Proteins

SIRT2 is a major cytoplasmic deacetylase and a key regulator of heart necrosis and metabolism (155-157). SIRT2 Knockout (KO) mice have no basal cardiac abnormalities. However, it was noted that SIRT KO mice are protected from cardiac ischemia-reperfusion injury (156). In rat cardiac tissue, SIRT2 was detected exclusively in the cytoplasm (158). However, it was also found in the nucleus of H9C2 cardiomyocytes (158). Multiple enzymes in glycolysis are targets for acetylation (158,159,160). However, there is no consensus about the impact of lysine acetylation on the activity of enzymes involved in glycolysis. In human embryonic kidney (HEK) cells, acetylation of the glycolytic enzymes; phosphoglycerate mutase-1 and glyceraldehyde-3-phosphate dehydrogenase enhances enzymes activity (161,162). In contrast, Xiong *et al* recently showed that acetylation of the glycolytic enzyme; pyruvate kinase at lysine 305 inhibits its activity (163). Moreover, proteomic analysis of other glycolytic enzymes including hexokinase, phosphoglycerate kinase, and enolase revealed that those enzymes are heavily acetylated (159,160); however, no further investigations regarding the impact of this post-translational modification on the enzyme activity was performed.

Insulin signaling pathway is also under acetylation control. Akt is an important component of the insulin signaling pathway and is regulated by phosphorylation. However, in recent years Akt was identified as a target for acetylation (141). A recent study by Rardin *et al* identified lysine

acetylation as important regulator of Akt activity in cardiac hypertrophy (164). Furthermore, recent findings showed that deacetylation of lysine residues 14 and 20 in the PH domain of Akt is a prerequisite for its activation (164), and that the activation of SIRT1 will enhance insulin signaling in obesity and diabetes (141,164-166). Interestingly, SIRT2 is also identified as a key regulator of Akt activity in HEK cells (157). SIRT2 binds and activates Akt in insulin responsive cells, whereas SIRT2 inhibition or genetic downregulation diminishes AKT activation by insulin (157). In embryonic stem cells, knockdown of SIRT2 leads to the activation of GSK3β through decreased serine 9 phosphorylation (167). Studies undertaken in this thesis will demonstrate the acetylation control of glycolytic and insulin signaling enzymes in different myocardial disease states.

1.6.2 Acetylation Regulation of Nuclear Proteins

Nuclear lysine acetylation has been extensively studied, and is linked to active gene transcription. This post translational modification is mediated by histone acetyltransferases (HATs) and is reversed by histone deacetylases (HDACs) (168). Both class 1 and class 2 HDACs play important roles in cardiac hypertrophy (169,170). Nuclear acetylation has an important role in regulating cardiac energy metabolism. For instance, PGC-1α and HIF-1α, important transcriptional regulators of genes involved in mitochondrial oxidative metabolism and glycolysis, are both under

acetylation control (171,172). SIRT1 is the best characterized and most widely studied family member. SIRT1 can directly interact with and regulate the activity of peroxisome proliferator activated receptor gamma coactivator 1-alpha (PGC-1α), a transcriptional regulator of genes that encode enzymes involved in mitochondrial biogenesis and fatty acid oxidation (171-173). There are about 13 lysine residues within the amino acid chain regions 200-400 of PGC-1α that can be reversibly acetylated (171,174,175). SIRT1 deacetylates and activates PGC-1α (148,171,174). Interestingly, phosphorylation of PGC-1α by AMPK is a prerequisite for deacetylation and activation by SIRT1 (176). Moreover, it was recently demonstrated that SIRT1 activates AMPK to improve mitochondrial function (177). Previous studies showed that acetylation of PGC-1α by the nuclear acetyltransferase general control of amino acid synthesis 5 (GCN5), results in an inhibition of PGC-1α transcriptional activity (178, 179). Interestingly, SIRT6 binds to and activates GCN5 thereby increasing PGC-1α acetylation (179). Peroxisome proliferator-activated receptors (PPARs) are transcription factors that regulate the activity of enzymes involved in fatty acids uptake and oxidation (180). PPARγ is deacetylated by SIRT1 (181). In white adipose tissue, SIRT1 represses PPARγ activity to promote fat mobilization (182). However, there is no direct evidence that deacetylation of PPARγ by SIRT1 inhibits its activity. Unlike PPARγ, PPARα is not a target for SIRT1. However, SIRT1 enhances PPARα activity in hepatic cells (183) .

HIF-1α, a transcription factor that upregulates the expression of genes involved in anaerobic glycolysis is another target for acetylation control (53,80). Recently SIRT1 was reported as an upstream regulator of HIF-1α activity (172,184). SIRT1 deacetylates and represses HIF-1α activity (185). Interestingly, SIRT6 was also reported as a corepressor of HIF-1α thereby inhibiting glycolysis (186).

FoxO1, a transcription factor that plays a key role in regulating the expression of proteins involved in cell growth and differentiation is under acetylation control. FoxO1 is known to be deacetylated and inhibited by SIRT1 (187,188). In skeletal muscles, SIRT1 deacetylate FoxO1 and inhibits induction of atrophy induced by fasting (189). Interestingly, overexpression of FoxO1 increases SIRT1 protein expressions in HEK293 cells (190). This result suggests that FoxO1 is a positive transcriptional regulator of SIRT1.

1.6.3 Acetylation Regulation of Mitochondrial Proteins

Data from large scale proteomic surveys suggested that about 20% of mitochondrial proteins are acetylated (142,191-195). Out of the seven sirtuins, SIRT3, 4, and 5 are localized in the mitochondria. However, SIRT3 appears to be the major deacetylase in mitochondria (194,191, 192,196-199). SIRT3 targets include key enzymes of fatty acid oxidation such as LCAD and β-HAD (159,192,196,200), PDH, the rate limiting enzyme of glucose oxidation (201,202), the TCA cycle (199,203), and the

ETC (204,205). It is generally considered that acetylation of fatty acid β-oxidation enzymes inhibits fatty acid β-oxidation. However, conflicting information has emerged regarding the role of acetylation in liver and muscle cell fatty acid β-oxidation. For instance, Hirschey *et al* proposed that acetylation of the fatty acid β-oxidation enzyme; LCAD inhibits liver fatty acid β-oxidation (196,200). Under conditions such as fasting, acetylation of LCAD was increased. Furthermore, in SIRT3 KO mice, lower hepatic fatty acid β-oxidation rates were observed compared to wild-type mice (196). LCAD was de-acetylated in wild-type mice under fasted conditions by SIRT3. In contrast, hyper-acetylation of LCAD reduced its enzymatic activity. This suggests that deacetylation of fatty acid oxidative enzymes by SIRT3 accelerates fatty acid β-oxidation. Moreover, chemical acetylation of LCAD on lysines 318/322 reduced enzymatic activity, while deacetylation with recombinant SIRT3 restored catalytic activity (206). In contrast, Zhao *et al* showed that acetylation of the fatty acid β-oxidative enzyme, enoyl CoA hydratase/3-hydroxyacyl CoA dehydrogenase in cardiac myocytes, results in an activation of enzyme activity (159). Interestingly, mitochondria from hindlimb muscles of fasted mice were shown to have an increased proteins acetylation that was associated with increased fatty acid β-oxidation rates (201). Diaphragm muscle of SIRT3 KO also showed mitochondrial proteins hyperacetylation and increased fatty acid β-oxidation rates (201). In addition, it is well established that obesity and diabetes, both of which are associated with high fatty acid β-

oxidation rates (61,96,137,207), lead to a decrease in SIRT3 protein expression (196,208,209). Studies undertaken in this thesis will also show that acetylation is actually associated with increased fatty acid β-oxidation rates in the heart. In support of this notion, a recent study suggested a positive correlation between acetylation and fatty acid β-oxidation in mitochondria and peroxisomes isolated from human and mouse hepatic cells (210). GCN5-like 1 (GCN5L1) was recently identified as an essential component of the mitochondrial acetyltransferase machinery which plays important role in mitochondrial protein acetylation, respiration, and metabolism (211). Liver GCN5L1 protein expression was increased with aging in rats (212). In a recent study, GCN5L1 has shown to enhance cell cycling by activating the master regulator of autophagy transcription factor EB (TFEB) (213). Very little is known about any changes in GCN5L1 expression patterns and if it has any role in controlling cardiac energy metabolism in health and disease.

Nasrin *et al* recently demonstrated that knocking down SIRT4 in mouse hepatocytes or myoblasts results in an increase in expression of many fatty acid oxidation enzymes, which was accompanied by an increase in fatty acid β-oxidation (214). While a deacetylase activity for SIRT4 had not previously been detected (215), a recent study showed that malonyl CoA decarboxylase (MCD), an enzyme primarily responsible for malonyl CoA degradation, was a target of SIRT4 (216). SIRT4 deacetylates and represses MCD activity. SIRT4 knockdown in liver and

muscle results in a significant upregulation of MCD activity, as well as increased fatty acid β-oxidation (216). This suggests that SIRT4 is a negative regulator of fatty acid β-oxidation. Furthermore, recent results from the same lab suggested that SIRT4 inhibits hepatic fatty acid β-oxidation by repressing PPARα activity (217). These results suggested a key role for SIRT4 in regulating lipid metabolism.

The rate-limiting step for glucose and lactate oxidation is flux through the PDH complex. PDH is regulated both by substrate/product ratios and by covalent modifications (180). Covalent modifications include phosphorylation and the recently suggested acetylation (194,201,202). Acetylation of lysine residues in the E1α subunit of PDH leads to suppressed enzymatic activity (201). Inhibition of SIRT3 in skeletal muscles or myoblasts induced hyperacetylation and inactivation of PDH, suggesting PDH as a major target of SIRT3 (201). However, the critical lysine residues targeted for acetylation could not be determined in this study (201) . In hearts from mice treated with angiotensin II, a reduction in SIRT3 protein level was associated with hyperacetylation and inactivation of PDH (59). A recent study by Fan *et al* suggested that acetylation at lysine 321 of PDH is an important regulator of PDH activity in different types of human cancer cells (202). SIRT3 knockdown results in increased lysine 321 acetylation and decreased PDH flux rate in cancer cells (202). A key component of this thesis will explore the impact of lysine acetylation on activity of key enzymes involved in glucose and fatty acid oxidation.

1.6.4 Acetylation Control of Energy Metabolism in Diabetes and Heart Failure

Accumulating body of evidence supports a role for sirtuins in the pathology of metabolic disorders, including diabetes and heart failure. Although alterations in histone acetylation and histone deacetylases are the best characterized examples of protein acetylation in diabetes, insulin resistance, and heart failure, emerging evidence also indicates potentially important effects of non-histone acetylation in these pathological states (218,219). For example, aging and high fat-feeding associated with insulin resistance results in a reduced expression of liver SIRT1 (220-222). *In vivo*, SIRT1 over-expression in mice results in a decrease in diet-induced obesity insulin resistance (165). Reduced SIRT1 also leads to reduced Akt activation and insulin-induced IRS-2 tyrosine phosphorylation (223). Activating SIRT1 can improve insulin sensitivity and glucose homeostasis in animal models of obesity and diabetes (165,166,171,177). In parallel, SIRT3 level was decreased in obesity and diabetes (196,208,209). Jonscher *et al* demonstrated that exposure to high fat feeding led to hyperacetylation of enzymes involved with mitochondrial oxidative phosphorylation and stress response (197). Hepatic SIRT3 activity was significantly reduced with no change in SIRT1 activity. Exposure of SIRT3 deleted mice to high fat diet led to further increase in acetylation of liver proteins that was associated with a significant decrease in the activity of respiratory complexes III and IV. This suggests that SIRT3 is a dominant

regulator of mitochondrial functions and protects against hepatic lipotoxicity under conditions of high fat feeding (196,197). Furthermore, SIRT3 deletion impairs insulin signaling in skeletal muscles by deactivating IRS-1 (208). Several studies have shown a correlation between depletion of SIRTs and heart failure (141,198,224,225). SIRT3 protein was decreased in Dahl salt-sensitive and spontaneously hypertensive heart failure rats (224). Mitochondrial proteins such as LCAD, ATP synthase, and PDH were hyperacetylated (224). Interestingly, mitochondrial complex I deletion promotes mitochondrial protein hyperacetylation and exacerbates pressure overload heart failure (226). Decreased NAD^+/NADH ratio inhibits SIRT3 which leads to protein hyperacetylation and sensitization of the permeability transition pore in mitochondria (226). It has been shown that exogenous NAD^+ supplementation was able to prevent cardiac hypertrophy via activation of SIRT3-LKB1-AMP activated kinase pathway; along with inhibition of pro-hypertrophic Akt1 signaling (227). In contrast, overexpression of SIRT1 induces cardiac hypertrophy and heart failure, whereas decreased levels of SIRT1 protects against age-dependent cardiac hypertrophy (55,228). In agreement, decreased SIRT1 expression in the heart impairs Akt activation and decreased hypertrophy in response to angiotensin treatment or physical exercise (164). Collectively, these results suggested a key role of SIRT1/3 in the regulation of hypertrophy signals. However,

the effects of SIRT1/3 on cardiac energy metabolism in the setting of heart failure are poorly studied.

1.7 Hypothesis and Aims

General Hypotheses

Post-translational modification of lysine acetylation of cardiac energy metabolic enzymes is important in controlling both mitochondrial oxidative metabolism and glycolysis. Increased mitochondrial acetylation in the heart increases fatty acid β-oxidation and decreases glucose oxidation. Furthermore, hyperacetylation of glycolytic enzymes represses glycolysis during maturation. Obesity, and heart failure results in a decrease in SIRT1 and SIRT3 activity which is associated with an increased acetylation of PGC-1α and Akt, leading to a decrease in both mitochondrial oxidative capacity and impaired insulin signaling. Decreased mitochondrial SIRT3 activity will lead to an increase in acetylation and activity of enzymes involved in fatty acid β-oxidation.

Specific Hypothesis

The specific hypotheses of this thesis are described within the individual chapters for each study.

Specific Aim 1

To determine whether changes in cardiac energy metabolism during maturation are accompanied by changes in acetylation levels of key enzymes involved in glycolysis and the oxidation of glucose and fatty acids. Hearts from 1-, 7-, and 21-day old rabbits will be used to measure glycolysis, and the oxidation of lactate, glucose, and fatty acids. Furthermore, acetylation levels of key enzymes involved in fatty acid and glucose metabolism will be assessed.

Specific Aim 2

To determine whether changes in lysine acetylation has any impact on cardiac fatty acid and glucose oxidation in obese and SIRT3 KO mice. Ex vivo cardiac function and metabolism will be measured using isolated working heart perfusions. In addition, we will determine what effect lysine acetylation has on cardiac insulin signaling.

Specific Aim 3

To investigate the role of lysine acetylation in regulating fatty acid β-oxidation and cardiac hypertrophy in volume overload heart failure mouse model. *In vivo* and *ex vivo* cardiac function and metabolism will be measured by ultrasound echocardiography and isolated working heart perfusions, respectively. Furthermore, acetylation levels of main proteins

involved in fatty acid metabolism and cardiac hypertrophy will be determined.